DRG No 8871-A-00

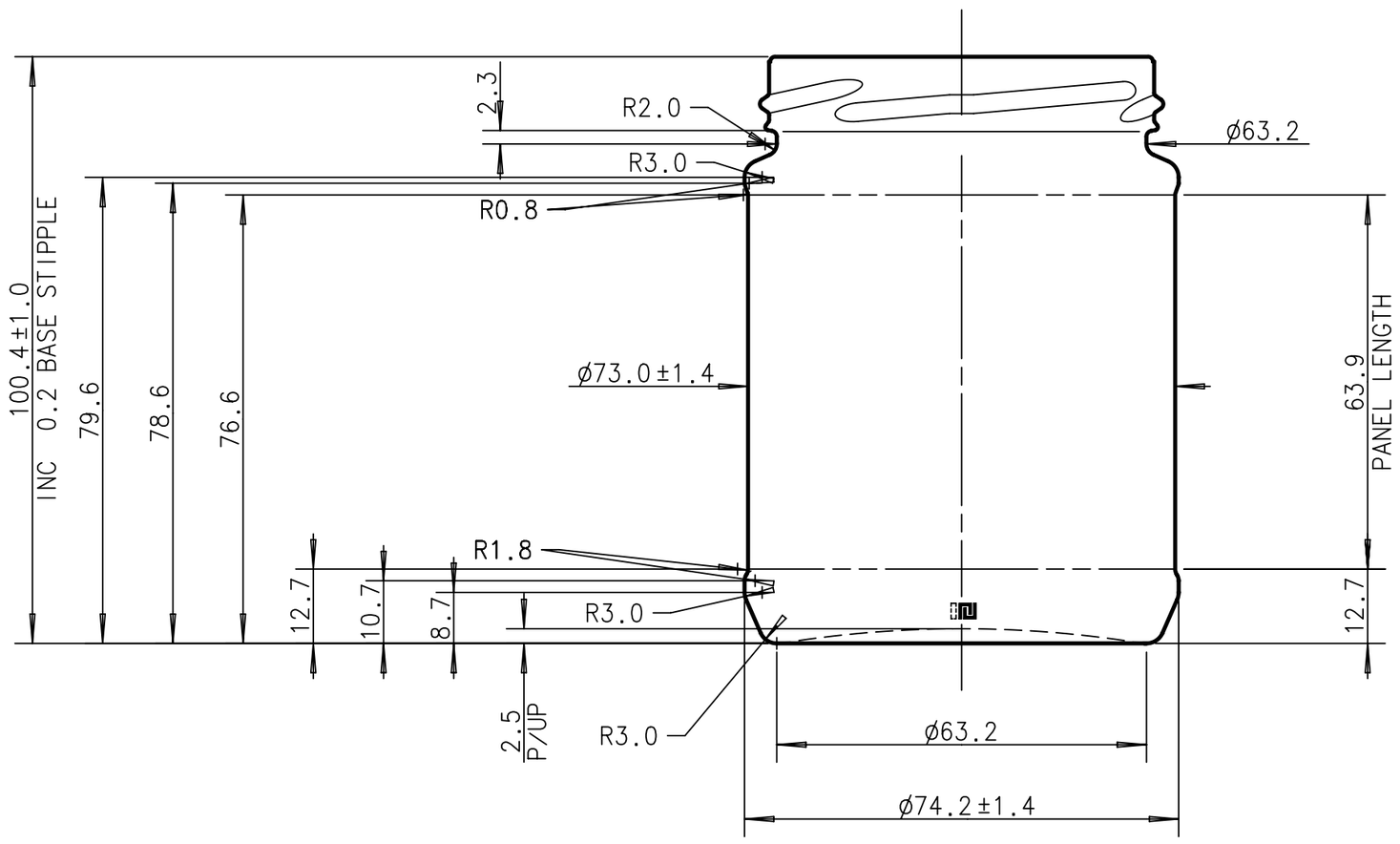


CID CODE AND MOULD CAVITY NO.

o oo o o o o o 2

DOT STIPPLE ON S/A

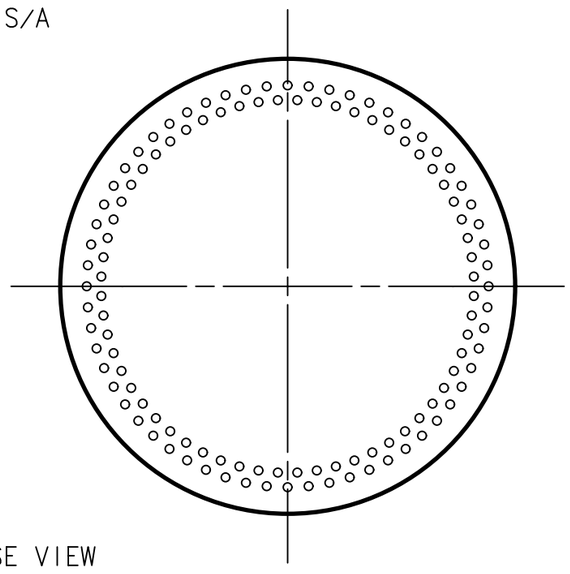

BASE VIEW

NOTES:

INSWEEP LETTERING TO BE 4.0mm HIGH. 0.2 PROUD, ROUND BOTTOM STYLE

ALL DIMENSIONS ARE IN MILLIMETERS

| | |
|---|---|
| GLASS COLOUR | FLINT |
| VACUITY | N/A |
| FILL LEVEL | N/A |
| MINIMUM THROUGH BORE | N/A |
| TILT ANGLE | 40.4° |
| MAXIMUM CARBONATION (GAS VOLUMES) | N/A |

| | REVISION | | DATE | CHK | DRC |
|---|---|---|---|---|---|
| G | | | | | |
| F | | | | | |
| E | | | | | |
| D | | | | | |
| C | | | | | |
| B | | | | | |
| A | MF-0309-0005 CONVERTED TO WARE SPECIFICATION, INSWEEP DESIGN MODIFIED TO ACOMMODATE ALL STANDARD EMBOSSING | TB | 19/01/06 | TB | DB |

| | | |
|---|---|---|
| BRIMFUL CAPACITY | 309.0ml ± 3.5ml | |
| WEIGHT NOMINAL | 229g | HUF=87.6 |
| FINISH | 70mm FD138S RF30038 | |
| SURFACE TREATMENT | HOT END - YES | COLD END - YES |

SPECIFICATION AGREEMENTS ARE BASED ON TOLERANCED DIMENSIONS ONLY
DO NOT SCALE DRAWING
COPYRIGHT RESERVED,NOT TO BE COPIED IN WHOLE OR PART WITHOUT WRITTEN PERMISSION FROM ROCKWARE GLASS LTD.

Rockware GLASS PACKAGING TECHNOLOGY

12oz JAR

CUSTOMER. NON PROPRIETARY

DRAWN. TB | DATE 06-01-06

CHECKED. TB | D.R.C. DB

| SCALE | DRAWING No | A2 |
|---|---|---|
| FULL SIZE | 8871-A-00 | |