DRG No 6265-F-00

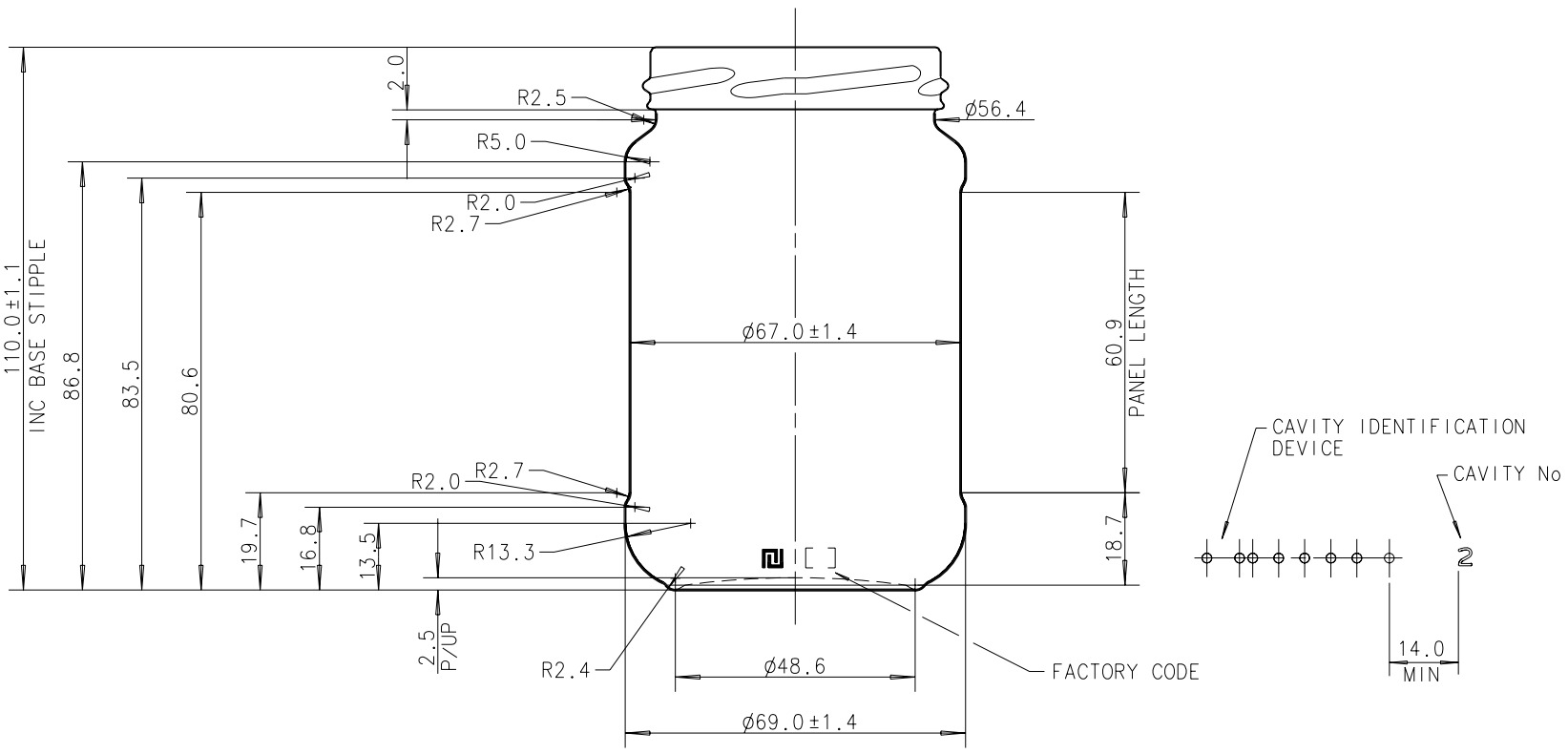

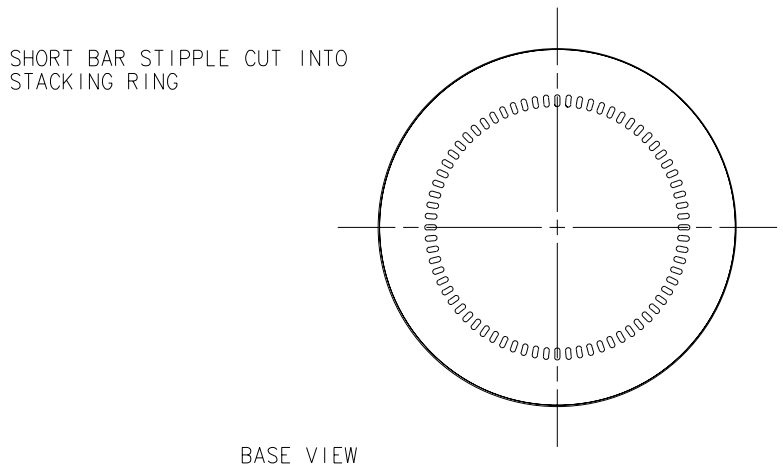

NOTES:

INSWEEP LETTERING TO BE 4.0 HIGH AND ROUND BOTTOM STYLE.

STACKING RING TO FD114.

ALL DIMENSIONS ARE IN MILLIMETERS

GLASS COLOUR	FLINT
MINIMUM THROUGH BORE	N/A
TILT ANGLE	27.7°
MAXIMUM ENGRAVING DEPTH	0.2
MAXIMUM CARBONATION (GAS VOLUMES)	N/A
MOULD EQUIPMENT ORDERED BY PLANT	W1

	REVISION	DATE	CHK	DRC
L				
K				
J				
H				
G				
F	FINISH WAS GF207. AB	28/03/00	DS	DB
E	CUST WAS ROBERTSONS, DESC WAS 297ml JAM, SPEC RE-DRAWN TO LATEST ROCKWARE FORMAT. S.M.	9/2/99		

BRIMFUL CAPACITY	297.0ml ± 4.6ml	
WEIGHT NOMINAL	174g	HUF=96.3
FINISH	63mm-RF30038(FD138S WITH FLARED BEAD)	
SURFACE TREATMENT	HOT END - YES	COLD END - YES

SPECIFICATION AGREEMENTS ARE BASED ON TOLERANCED DIMENSIONS ONLY
DO NOT SCALE DRAWING
COPYRIGHT RESERVED,NOT TO BE COPIED IN WHOLE OR PART WITHOUT WRITTEN PERMISSION FROM ROCKWARE GLASS LTD.

Rockware GLASS PACKAGING TECHNOLOGY

12oz FOOD JAR

CUSTOMER.	NON PROPRIETARY		
DRAWN.	S.M.	DATE	09-02-99
CHECKED.		D.R.C.	
SCALE	DRAWING No		A2
FULL SIZE	6265-F-00		