DRG No 7942-B-00

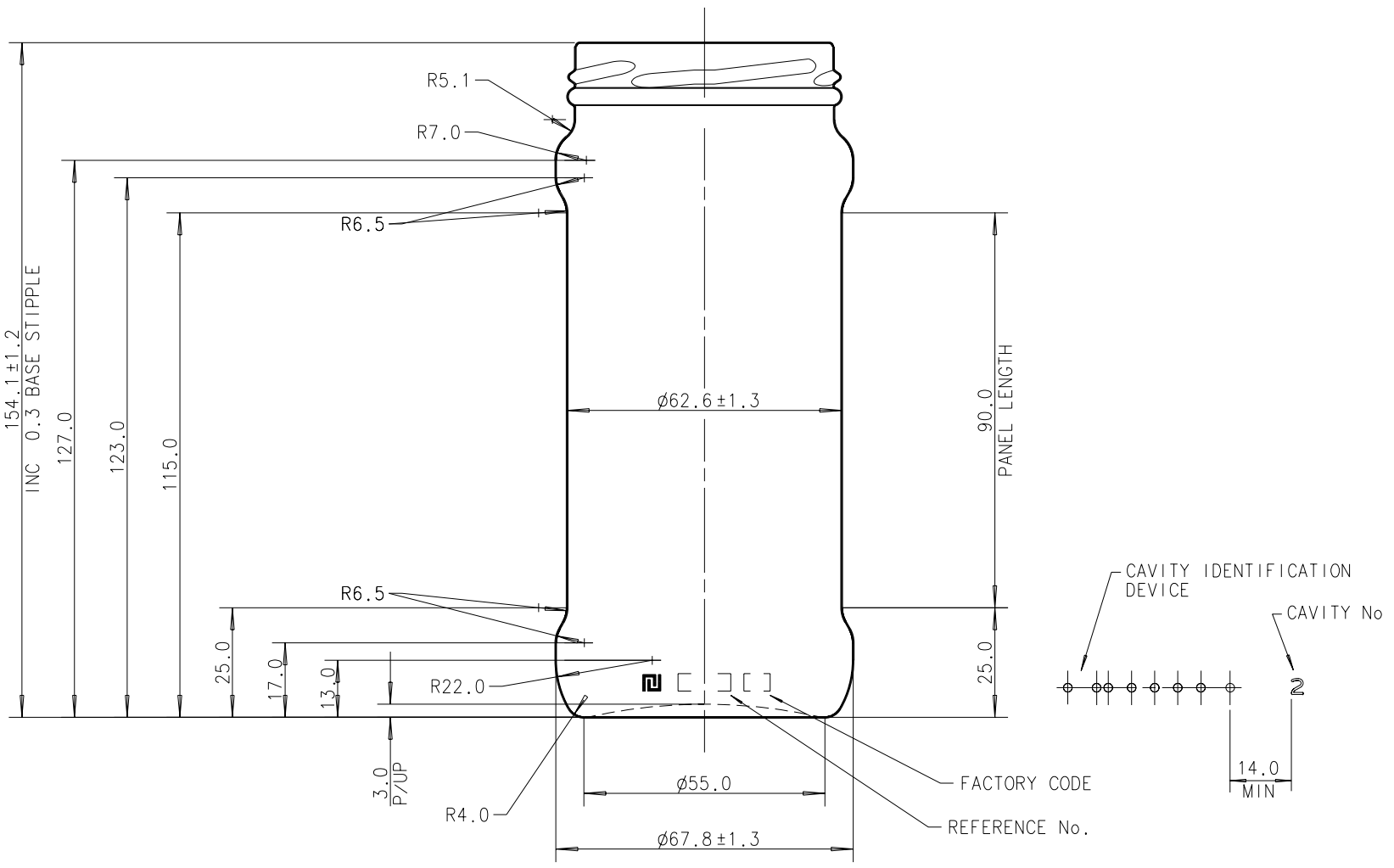

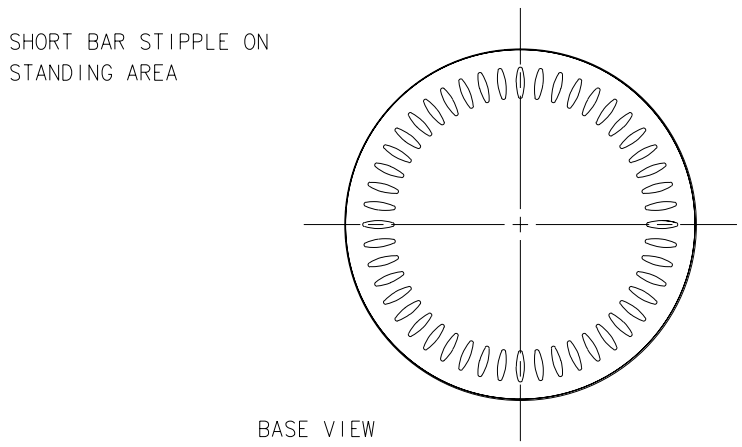

NOTES:

INSWEEP LETTERING TO BE 4.0mm HIGH. 0.2 PROUD, ROUND BOTTOM STYLE

ALL DIMENSIONS ARE IN MILLIMETERS

GLASS COLOUR	FLINT
VACUITY	N/A
MINIMUM THROUGH BORE	N/A
TILT ANGLE	N/A
MAXIMUM CARBONATION (GAS VOLUMES)	N/A

	REVISION		DATE	CHK	DRC
H					
G					
F					
E					
D					
C					
B	REDRAWN - FINISH WAS GF207.	AB	26/06/01	TB	DB

BRIMFUL CAPACITY	370.0ml ± 5.3ml	HUF=139.3
WEIGHT NOMINAL	257g	
FINISH	63mm - RF30057 (FD138S BEADED)	
SURFACE TREATMENT	HOT END - YES	COLD END - YES

SPECIFICATION AGREEMENTS ARE BASED ON TOLERANCED DIMENSIONS ONLY
DO NOT SCALE DRAWING
COPYRIGHT RESERVED,NOT TO BE COPIED IN WHOLE OR PART WITHOUT WRITTEN PERMISSION FROM ROCKWARE GLASS LTD.

Rockware GLASS PACKAGING TECHNOLOGY

370ml JAR

CUSTOMER. NON PROPRIETARY			
DRAWN. A.B.		DATE 22-06-01	
CHECKED. TB		D.R.C. DB	
SCALE	DRAWING No		A2
FULL SIZE	7942-B-00		